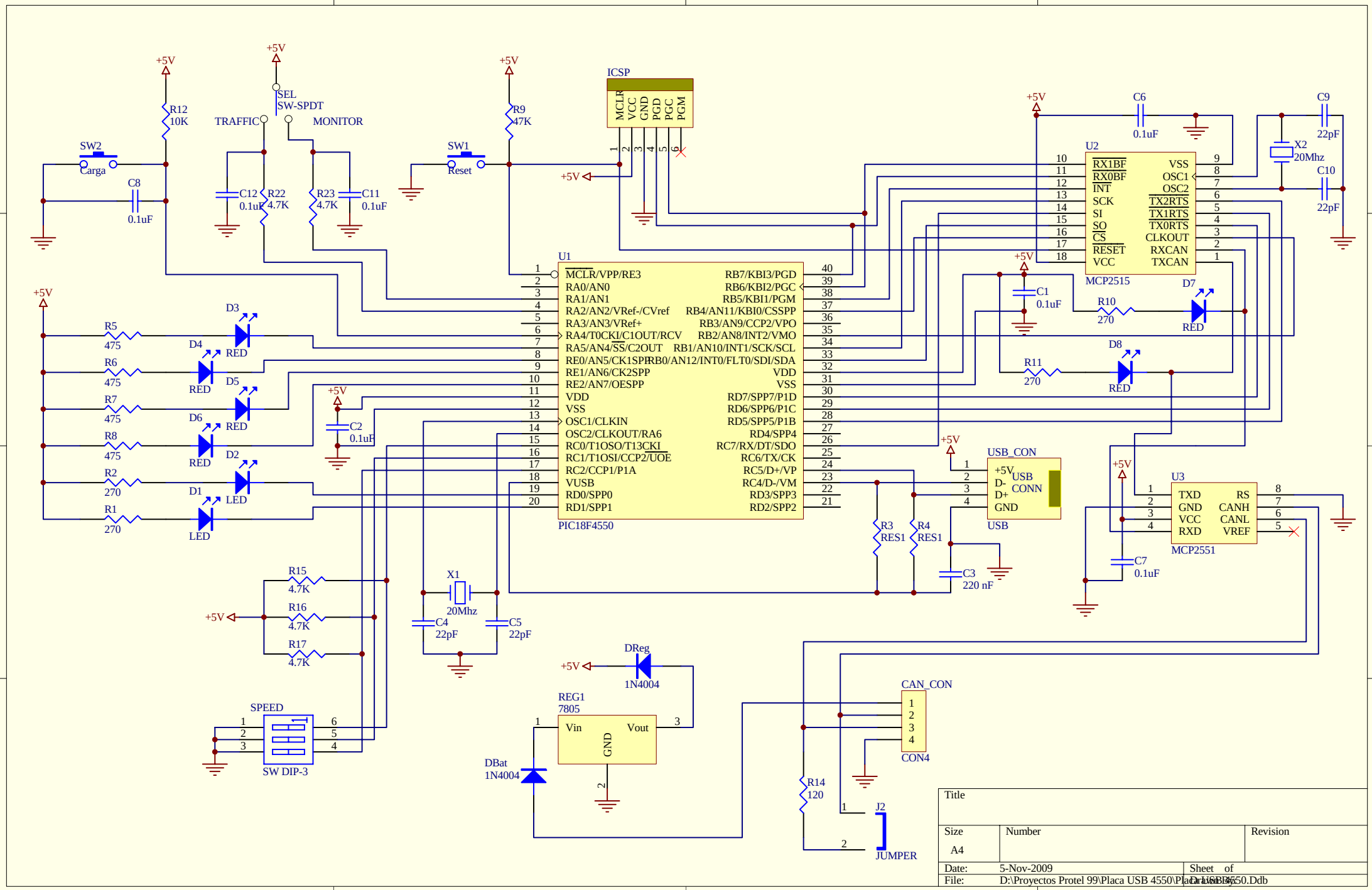
ICSP
MCLR
VCC
GND
PGD
PGC
PGM
SW2
Carga
SW1
Reset
R12
10K
R9
47K
C8
0.1uF
SEL
SW-SPDT
TRAFFIC
MONITOR
C12
0.1uF
R22
4.7K
R23
4.7K
C11
0.1uF
+5V
U1
MCLR/VPP/RE3
RA0/AN0
RA1/AN1
RA2/AN2/VRef-/CVref
RA3/AN3/VRef+
RA4/T0CKI/C1OUT/RCV
RA5/AN4/SS/C2OUT
RE0/AN5/CK1SPP
RE1/AN6/CK2SPP
RE2/AN7/OESPP
VDD
VSS
OSC1/CLKIN
OSC2/CLKOUT/RA6
RC0/T1OSO/T13CKI
RC1/T1OSI/CCP2/UOE
RC2/CCP1/P1A
VUSB
RD0/SPP0
RD1/SPP1
RB7/KBI3/PGD
RB6/KBI2/PGC
RB5/KBI1/PGM
RB4/AN11/KBI0/CSSPP
RB3/AN9/CCP2/VPO
RB2/AN8/INT2/VMO
RB1/AN10/INT1/SCK/SCL
RB0/AN12/INT0/FLT0/SDI/SDA
VDD
VSS
RD7/SPP7/P1D
RD6/SPP6/P1C
RD5/SPP5/P1B
RD4/SPP4
RC7/RX/DT/SDO
RC6/TX/CK
RC5/D+/VP
RC4/D-/VM
RD3/SPP3
RD2/SPP2
PIC18F4550
U2
RX1BF
RX0BF
INT
SCK
SI
SO
CS
RESET
VCC
VSS
OSC1
OSC2
TX2RTS
TX1RTS
TX0RTS
CLKOUT
RXCAN
TXCAN
MCP2515
C6
0.1uF
C9
22pF
C10
22pF
X2
20Mhz
C1
0.1uF
R10
270
R11
270
D7
D8
RED
R5
475
R6
475
R7
475
R8
475
R2
270
R1
270
D3
D4
D5
D6
D2
D1
LED
C2
0.1uF
USB_CON
+5V
D-
D+
GND
USB
CONN
R3
RES1
R4
RES1
C3
220 nF
U3
TXD
GND
VCC
RXD
RS
CANH
CANL
VREF
MCP2551
C7
0.1uF
R15
4.7K
R16
4.7K
R17
4.7K
X1
20Mhz
C4
22pF
C5
22pF
SPEED
SW DIP-3
DReg
1N4004
REG1
7805
Vin
Vout
GND
DBat
1N4004
CAN_CON
CON4
R14
120
J2
JUMPER
Title
Size
A4
Number
Revision
Date:
5-Nov-2009
Sheet of
File:
D:\Proyectos Protel 99\Placa USB 4550\Placa USB 4550.Ddb