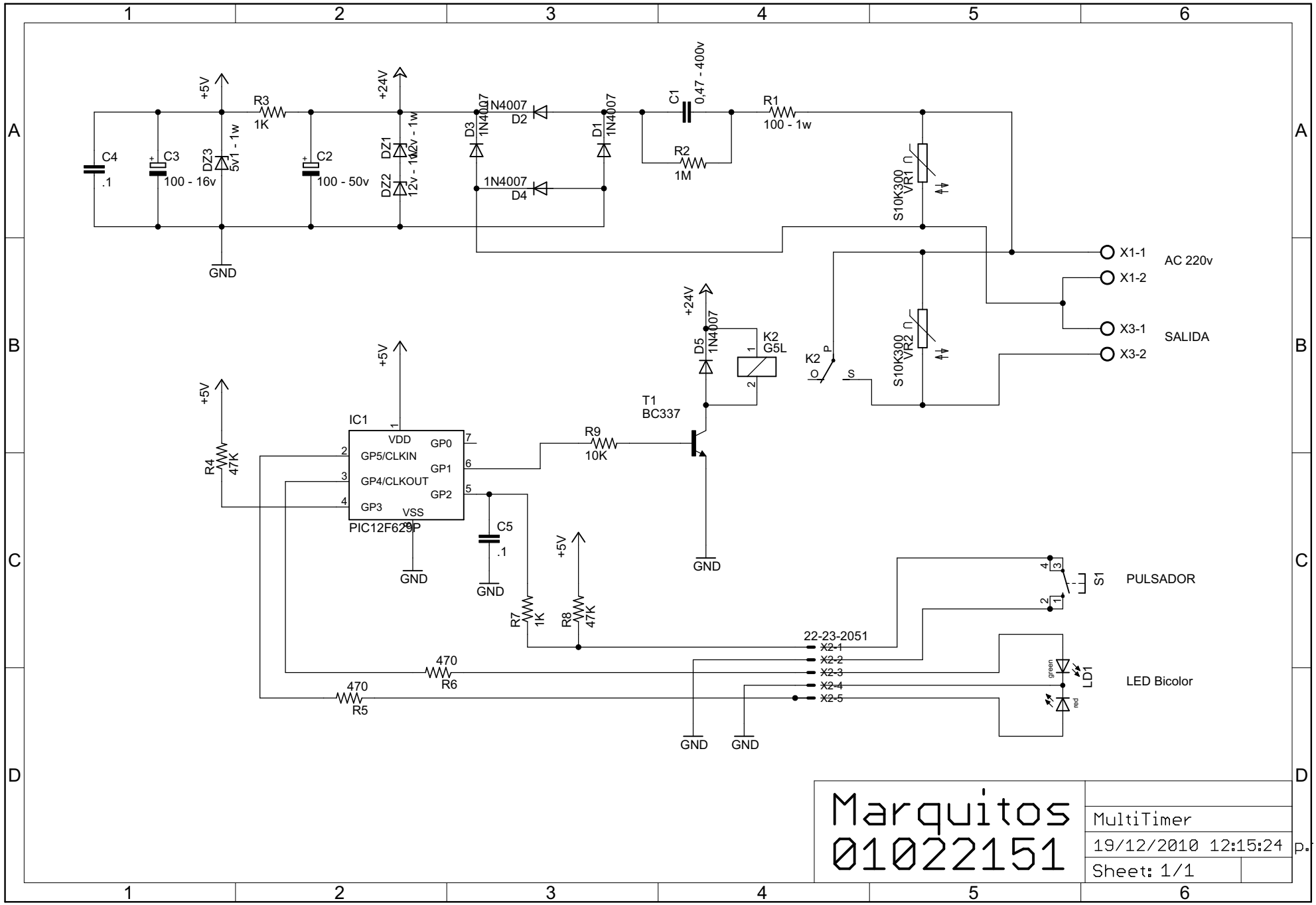
+5V
R3
1K
+24V
C4
.1
C3
100 - 16v
DZ3
5V1 - 1w
C2
100 - 50v
DZ1
12v - 1w
DZ2
12v - 1w
D3
1N4007
D2
1N4007
D1
1N4007
D4
1N4007
C1
0,47 - 400v
R2
1M
R1
100 - 1w
S10K300
VR1
S10K300
VR2
GND
X1-1
X1-2
AC 220v
X3-1
X3-2
SALIDA
D5
1N4007
K2
G5L
K2
P
O
S
T1
BC337
IC1
VDD
GP0
GP5/CLKIN
GP1
GP4/CLKOUT
GP2
GP3
VSS
PIC12F629P
R4
47K
R9
10K
C5
.1
R7
1K
R8
47K
22-23-2051
X2-1
X2-2
X2-3
X2-4
X2-5
470
R6
470
R5
S1
PULSADOR
LD1
green
red
LED Bicolor
Marquitos
01022151
MultiTimer
19/12/2010 12:15:24
Sheet: 1/1