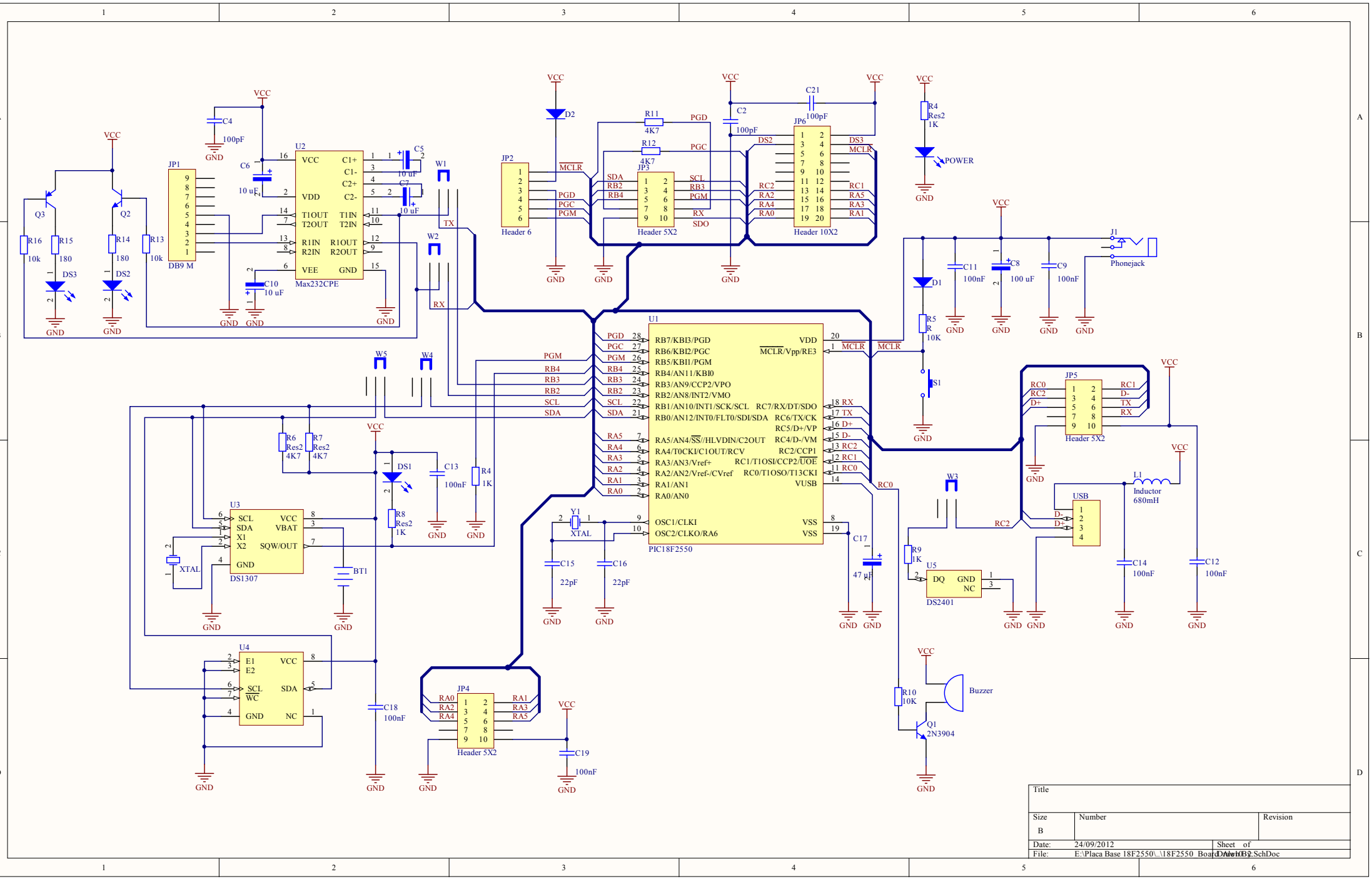
U1
PIC18F2550
U2
Max232CPE
U3
DS1307
U4
JP1
DB9 M
JP2
Header 6
JP3
Header 5X2
JP4
Header 5X2
JP5
Header 5X2
JP6
Header 10X2
U5
DS2401
USB
J1
Phonejack
Buzzer
Q1
2N3904
POWER
VCC
GND
TX
RX
PGD
PGC
PGM
MCLR
SDA
SCL
SDO
RC0
RC2
Title
Size
B
Number
Revision
Date: 24/09/2012
Sheet of
File: E:\Placa Base 18F2550\...\18F2550_BoardDaughter.SchDoc