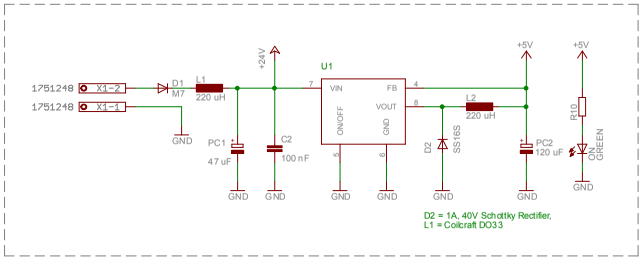

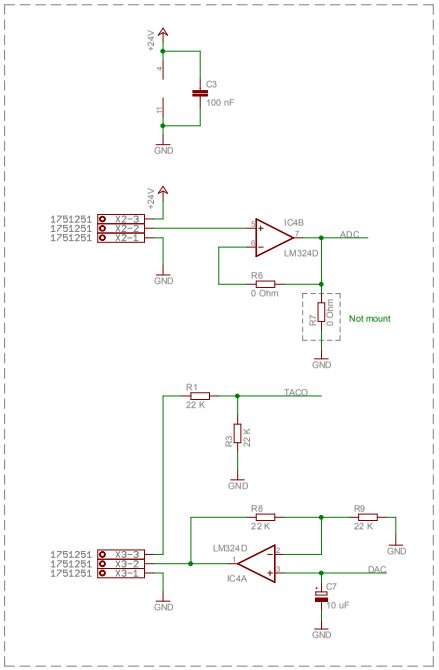

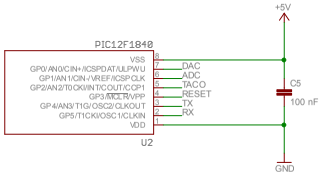

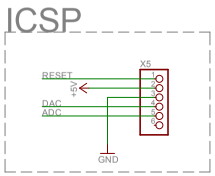

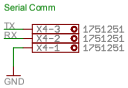

TITLE: FlowControl	
Document Number:	REV:
Date: 19/01/2013 12:47:45	Sheet: 1/1