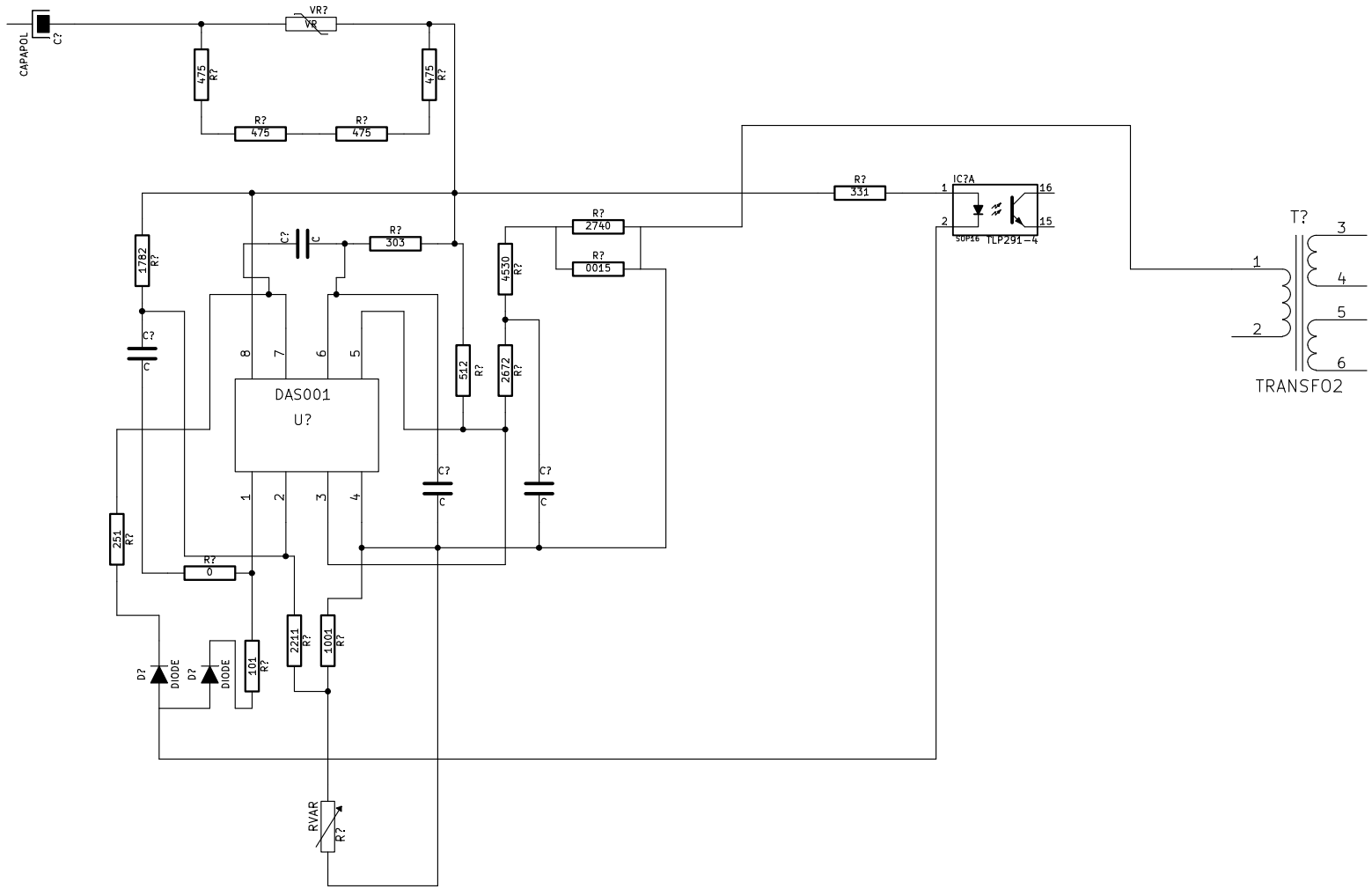

File: fuentesw.sch		
Sheet: /		
Title:		
Size: A4	Date: 4 apr 2015	**Rev:**
KiCad E.D.A. eeschema (2013-07-07 BZR 4022)-stable		Id: 1/1