Developement board
PIC12F675/29
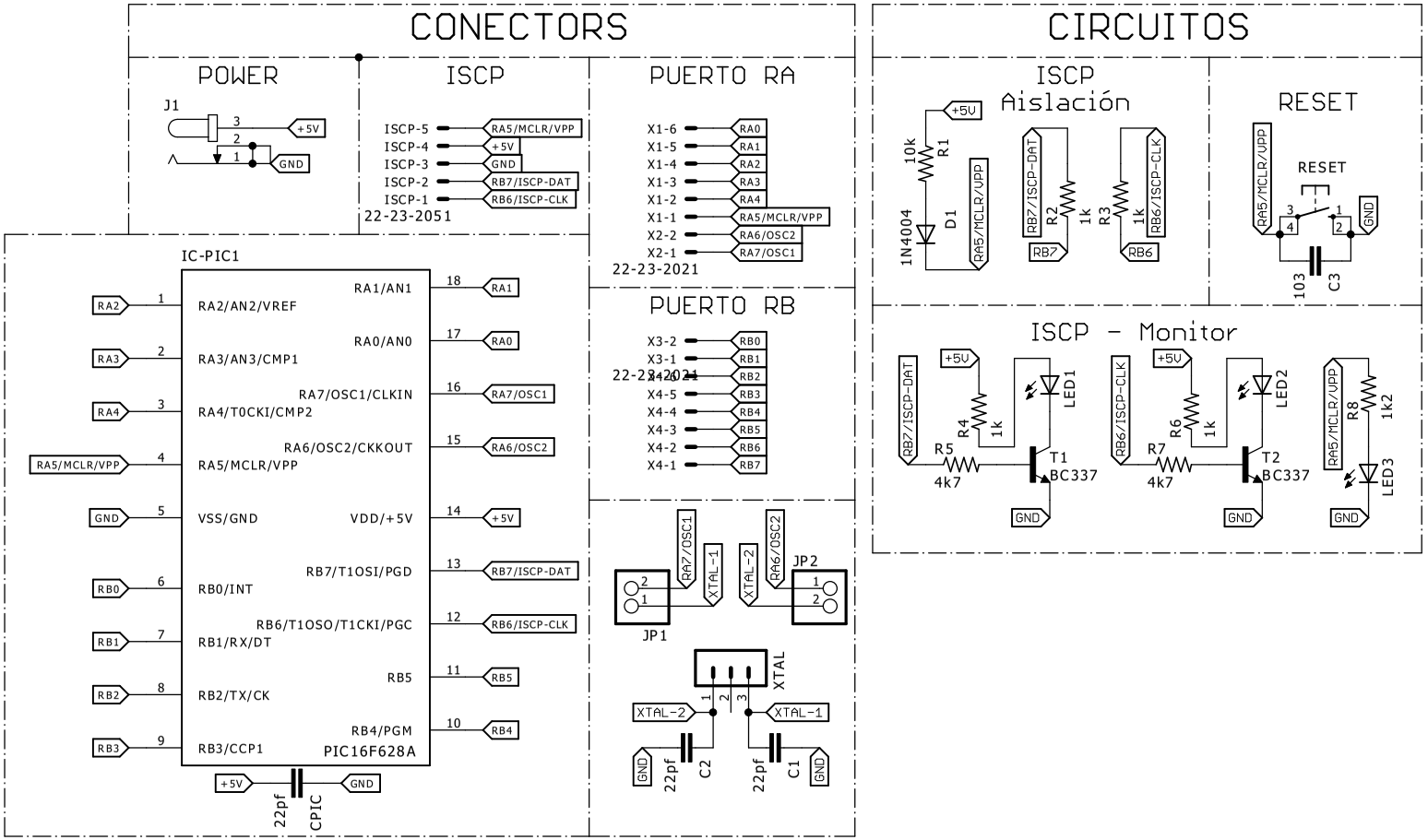
Leonardo A. Barreiro (Nano_T)