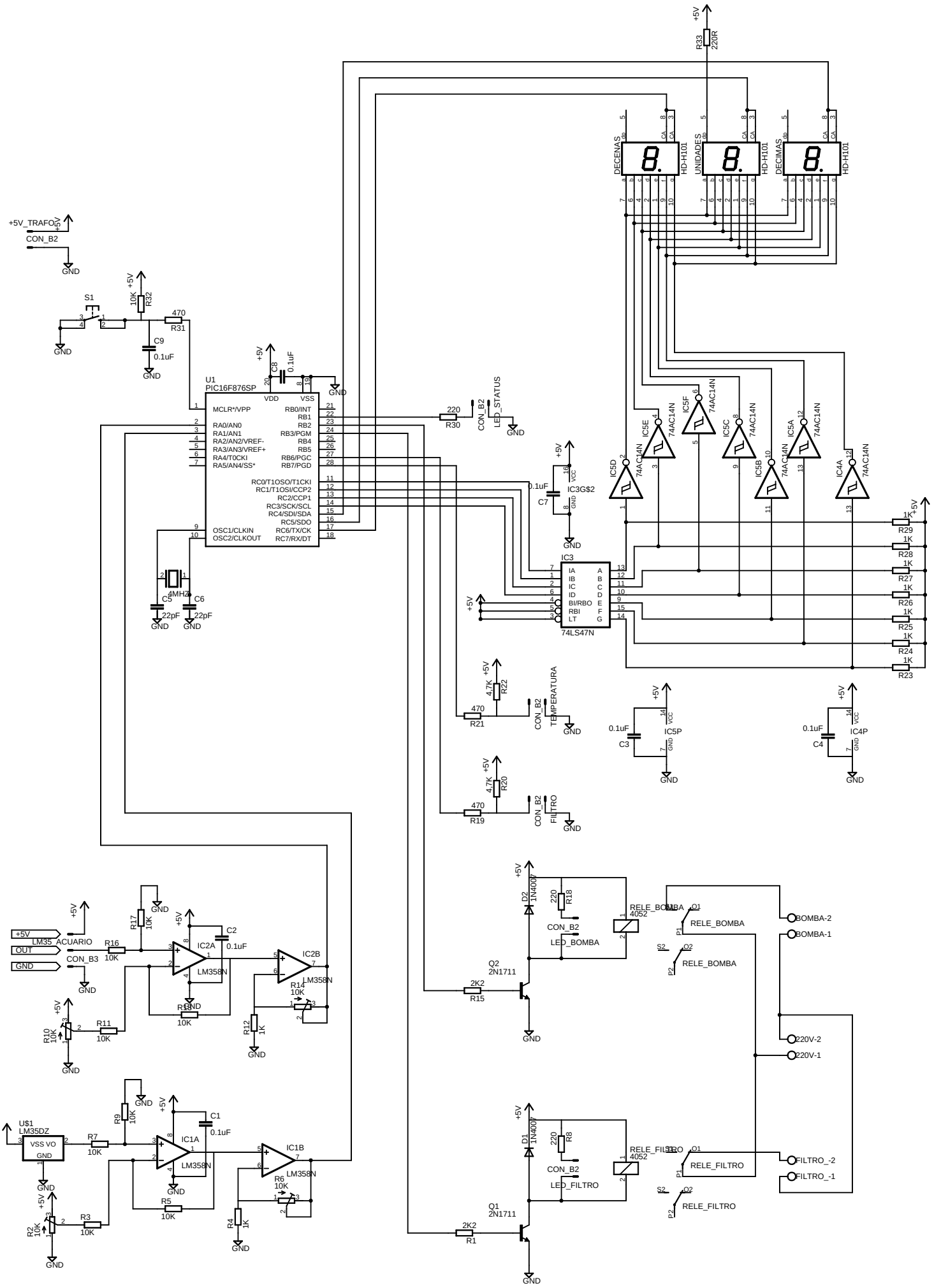

30/07/2007 16:49:03 f=0.66 D:\EAGLE\Acuario\Acuario01.sch (Sheet: 1/1)