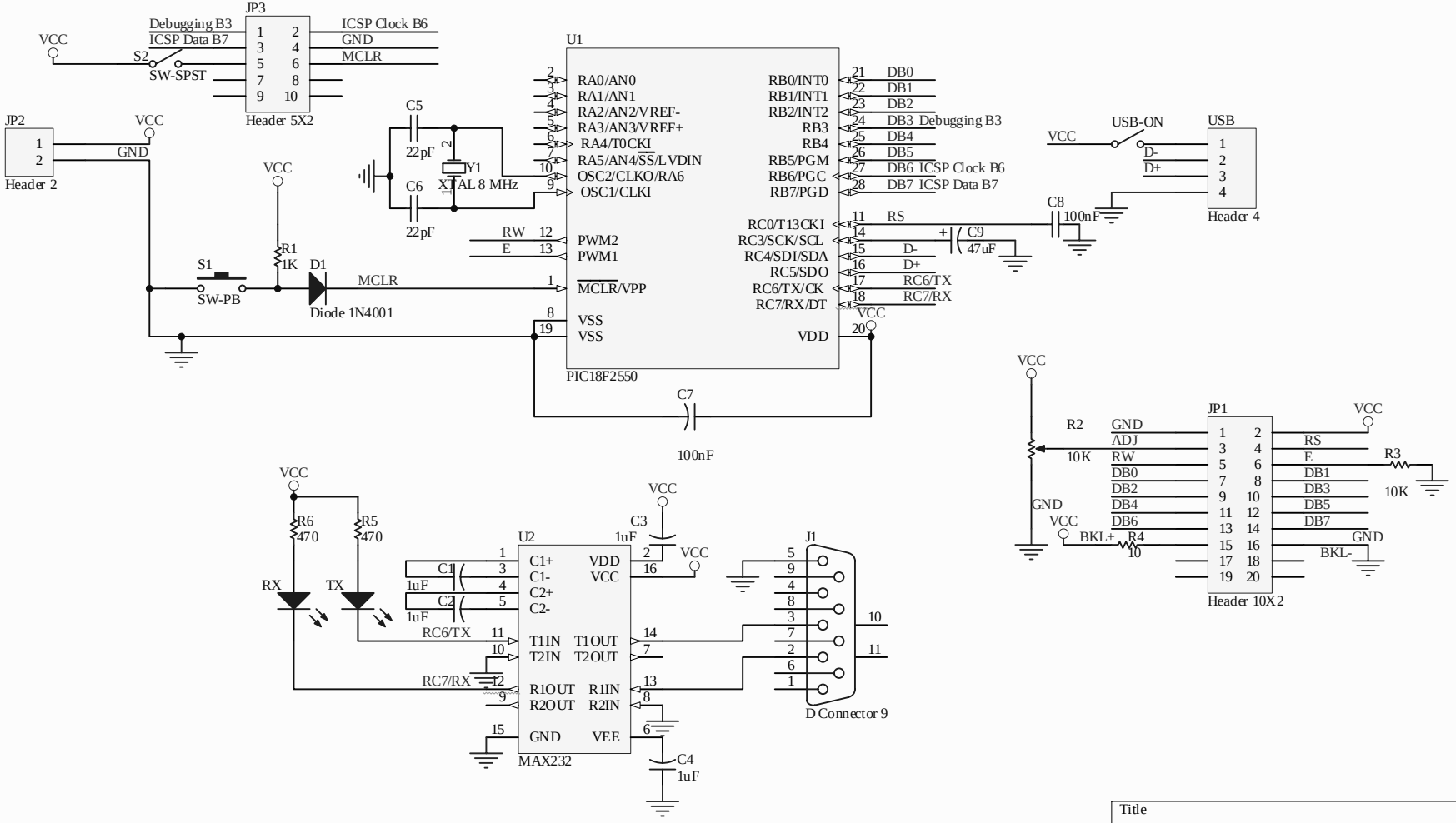

Title		
Size A4	Number	Revision
Date: 30/08/2007	Sheet of	
File: D:\Electronica\RS232 y LCD\placa.SCHDOC	Drawn By:	