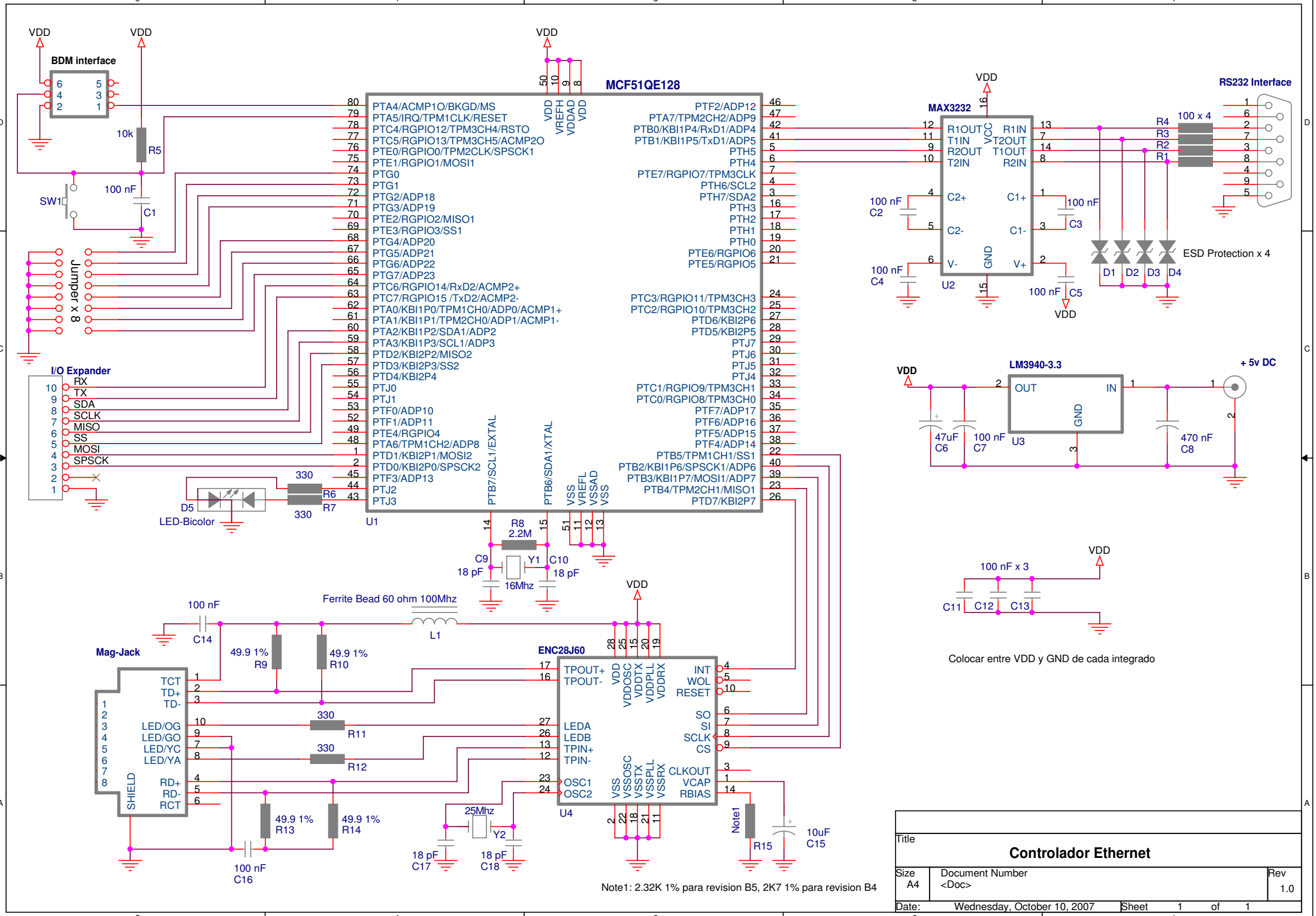
BDM interface
MCF51QE128
MAX3232
RS232 Interface
ESD Protection x 4
Jumper x 8
I/O Expander
LED-Bicolor
LM3940-3.3
+ 5v DC
Mag-Jack
ENC28J60
Ferrite Bead 60 ohm 100Mhz
16Mhz
25Mhz
100 nF x 3
Colocar entre VDD y GND de cada integrado
Note1: 2.32K 1% para revision B5, 2K7 1% para revision B4
Title
Controlador Ethernet
Size
A4
Document Number
<Doc>
Rev
1.0
Date: Wednesday, October 10, 2007
Sheet 1 of 1