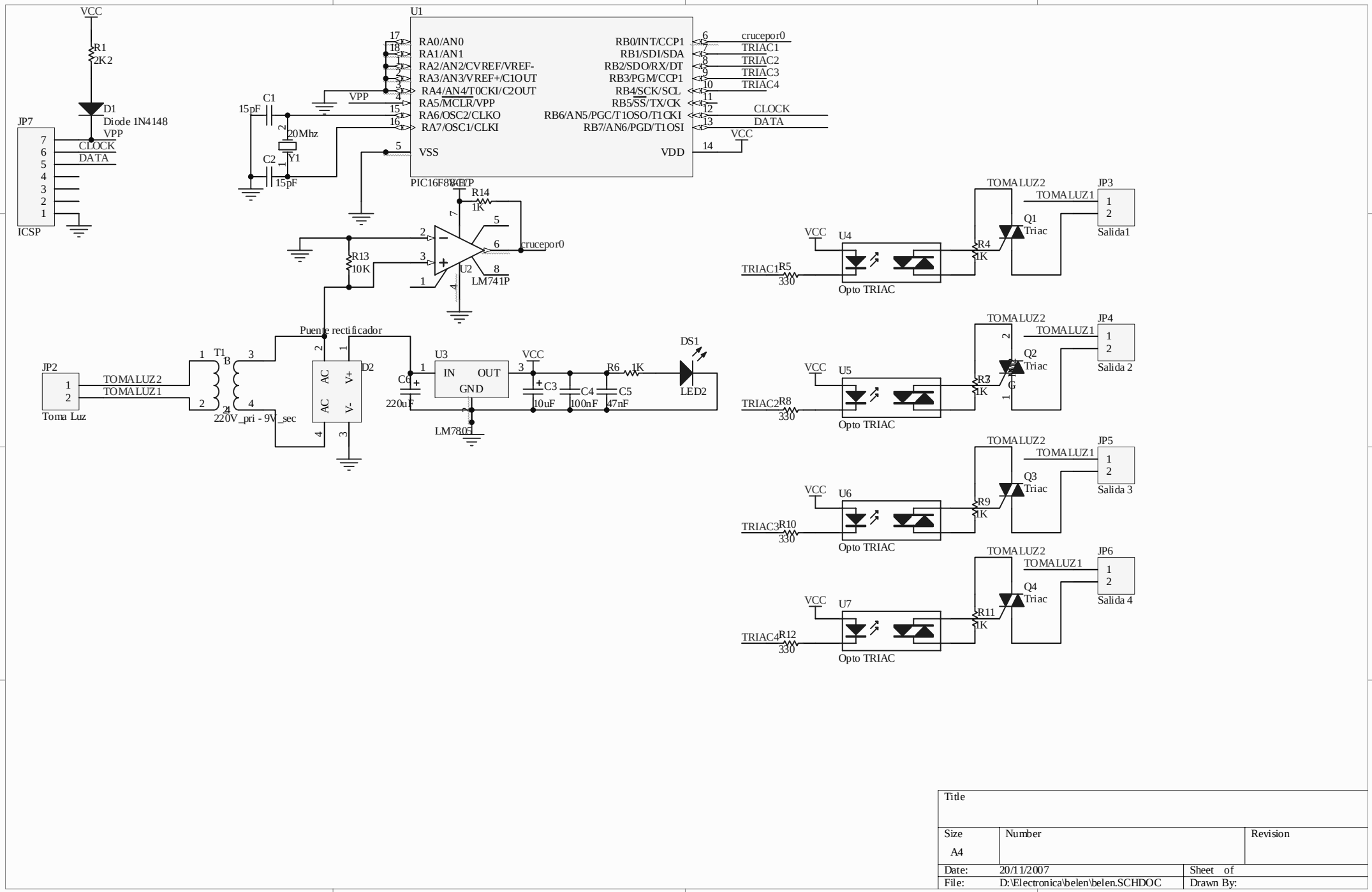
VCC
R1
2K2
D1
Diode 1N4148
VPP
JP7
CLOCK
DATA
ICSP
U1
RA0/AN0
RA1/AN1
RA2/AN2/CVREF/VREF-
RA3/AN3/VREF+/C1OUT
RA4/AN4/T0CKI/C2OUT
RA5/MCLR/VPP
RA6/OSC2/CLKO
RA7/OSC1/CLKI
VSS
RB0/INT/CCP1
RB1/SDI/SDA
RB2/SDO/RX/DT
RB3/PGM/CCP1
RB4/SCK/SCL
RB5/SS/TX/CK
RB6/AN5/PGC/T1OSO/T1CKI
RB7/AN6/PGD/T1OSI
VDD
crucepor0
TRIAC1
TRIAC2
TRIAC3
TRIAC4
CLOCK
DATA
C1
15pF
C2
15pF
20Mhz
Y1
PIC16F874/P
R14
1K
R13
10K
U2
LM741P
Puente rectificador
JP2
TOMALUZ2
TOMALUZ1
Toma Luz
T1
220V_pri - 9V_sec
D2
C6
220uF
U3
IN
OUT
GND
LM7805
C3
10uF
C4
100nF
C5
47nF
R6
1K
DS1
LED2
U4
U5
U6
U7
R5
330
R8
330
R10
330
R12
330
Opto TRIAC
R4
1K
R7
1K
R9
1K
R11
1K
Q1
Triac
Q2
Triac
Q3
Triac
Q4
Triac
JP3
JP4
JP5
JP6
Salida1
Salida 2
Salida 3
Salida 4
Title
Size
A4
Number
Revision
Date:
20/11/2007
Sheet of
File:
D:\Electronica\belen\belen.SCHDOC
Drawn By: