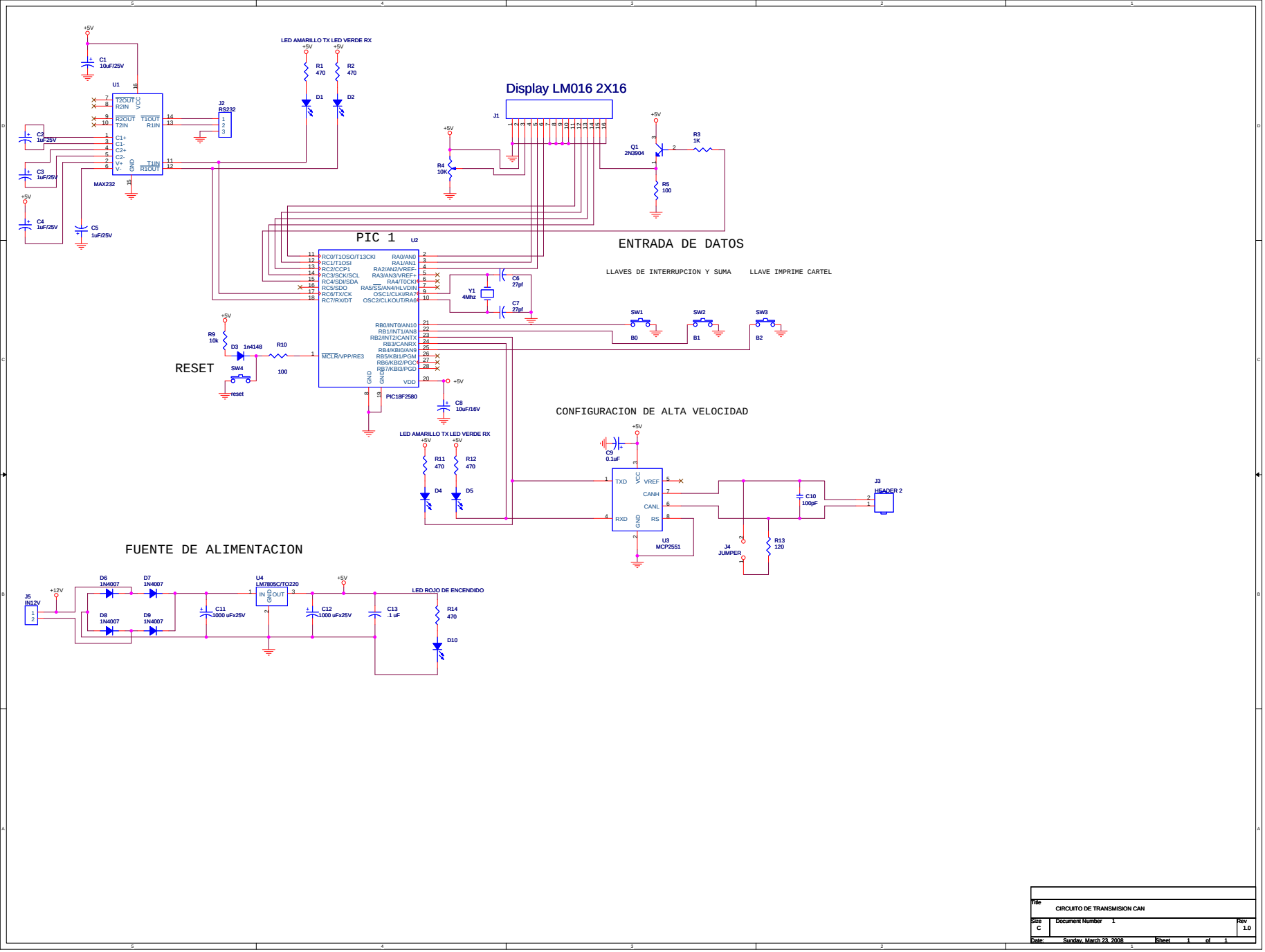

Title	CIRCUITO DE TRANSMISION CAN
Size C	Document Number 1
Rev	1.0
Date:	Sunday, March 23, 2008
Sheet	1 of 1