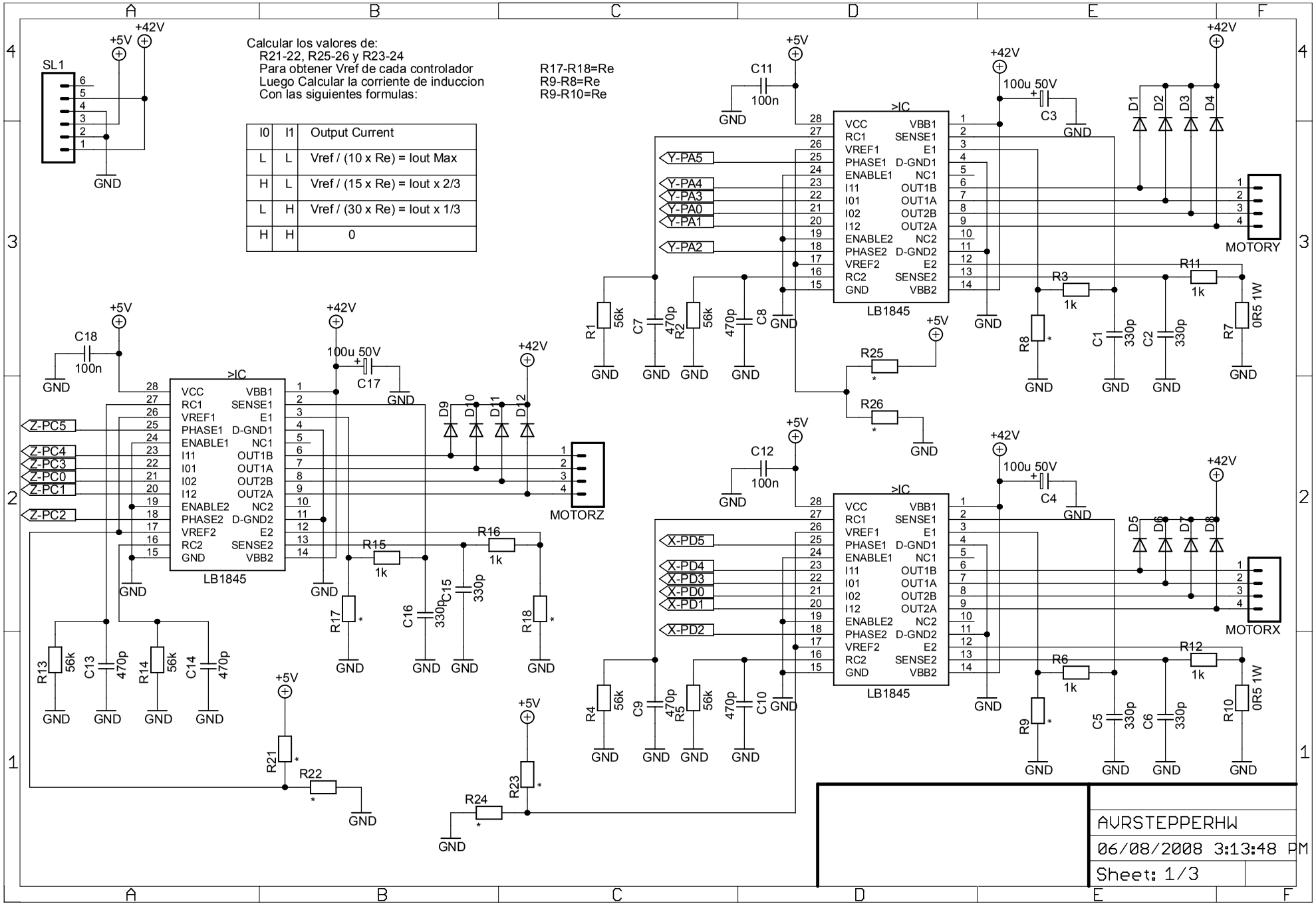
Calcular los valores de:
R21-22, R25-26 y R23-24
Para obtener Vref de cada controlador
Luego Calcular la corriente de induccion
Con las siguientes formulas:
R17-R18=Re
R9-R8=Re
R9-R10=Re
I0 I1 Output Current
L L Vref / (10 x Re) = Iout Max
H L Vref / (15 x Re) = Iout x 2/3
L H Vref / (30 x Re) = Iout x 1/3
H H 0
SL1
+5V
+42V
GND
LB1845
MOTORY
MOTORX
MOTORZ
Y-PA5
Y-PA4
Y-PA3
Y-PA0
Y-PA1
Y-PA2
X-PD5
X-PD4
X-PD3
X-PD0
X-PD1
X-PD2
Z-PC5
Z-PC4
Z-PC3
Z-PC0
Z-PC1
Z-PC2
AVRSTEPPERHW
06/08/2008 3:13:48 PM
Sheet: 1/3

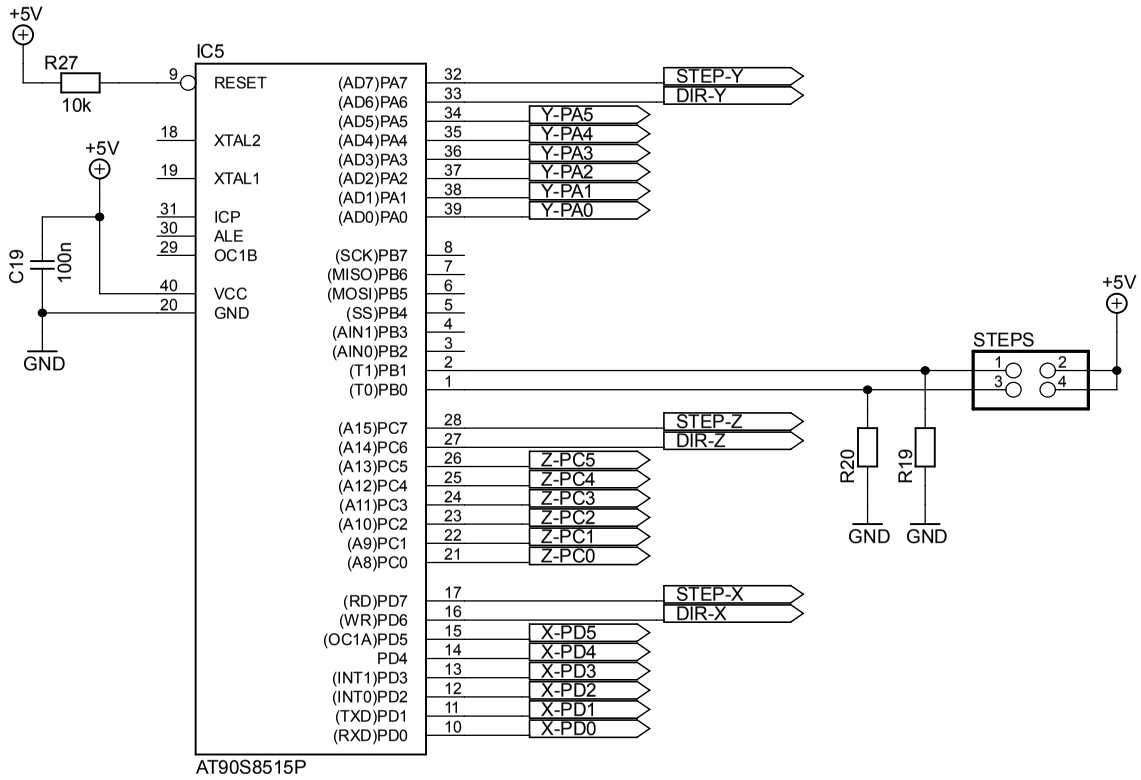

AVRSTEPPERHW

06/08/2008 3:13:48 PM

Sheet: 2/3

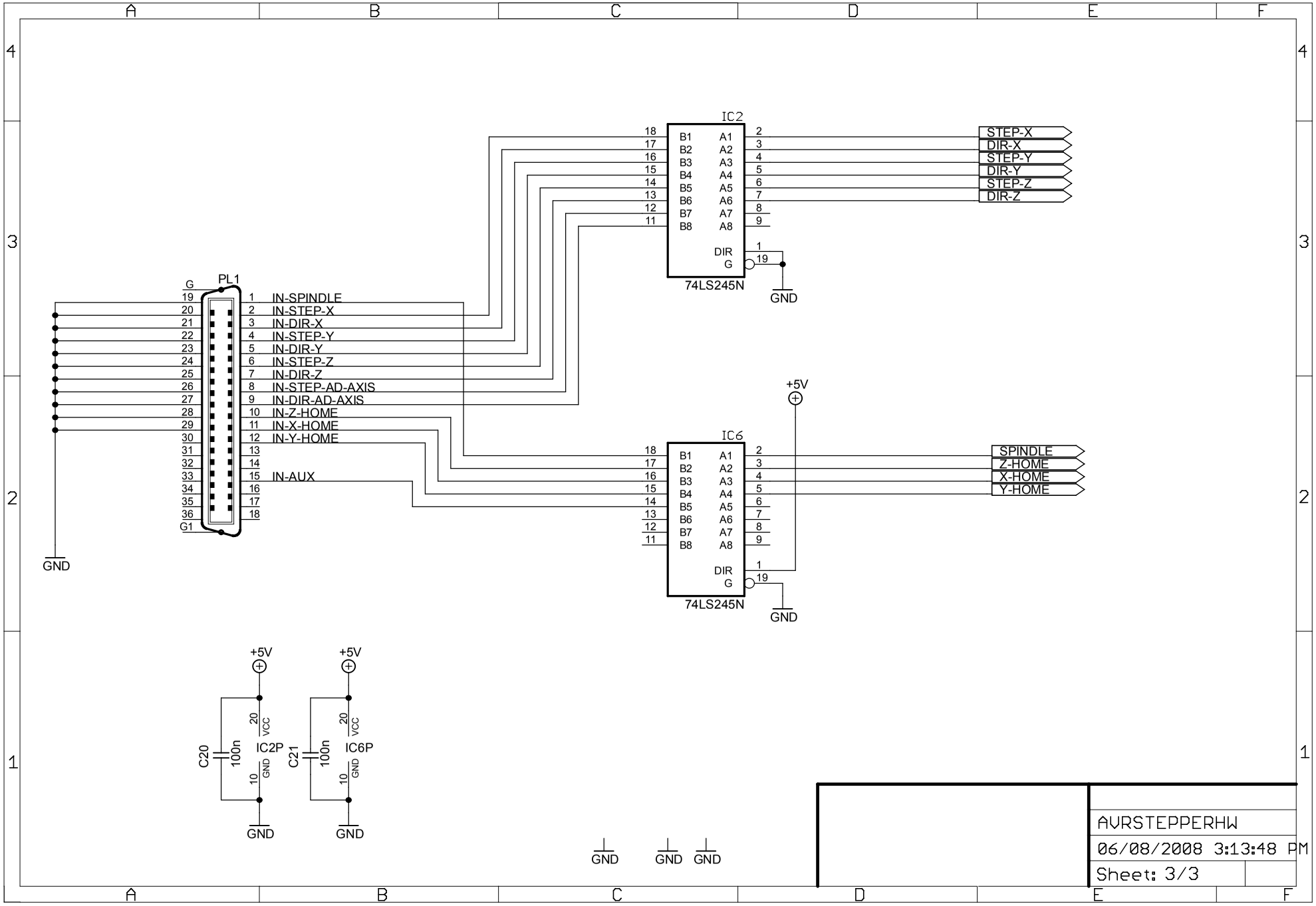
IC2
74LS245N
IC6
74LS245N
PL1
IN-SPINDLE
IN-STEP-X
IN-DIR-X
IN-STEP-Y
IN-DIR-Y
IN-STEP-Z
IN-DIR-Z
IN-STEP-AD-AXIS
IN-DIR-AD-AXIS
IN-Z-HOME
IN-X-HOME
IN-Y-HOME
IN-AUX
STEP-X
DIR-X
STEP-Y
DIR-Y
STEP-Z
DIR-Z
SPINDLE
Z-HOME
X-HOME
Y-HOME
+5V
GND
C20
100n
IC2P
C21
100n
IC6P
VCC
AVRSTEPPERHW
06/08/2008 3:13:48 PM
Sheet: 3/3