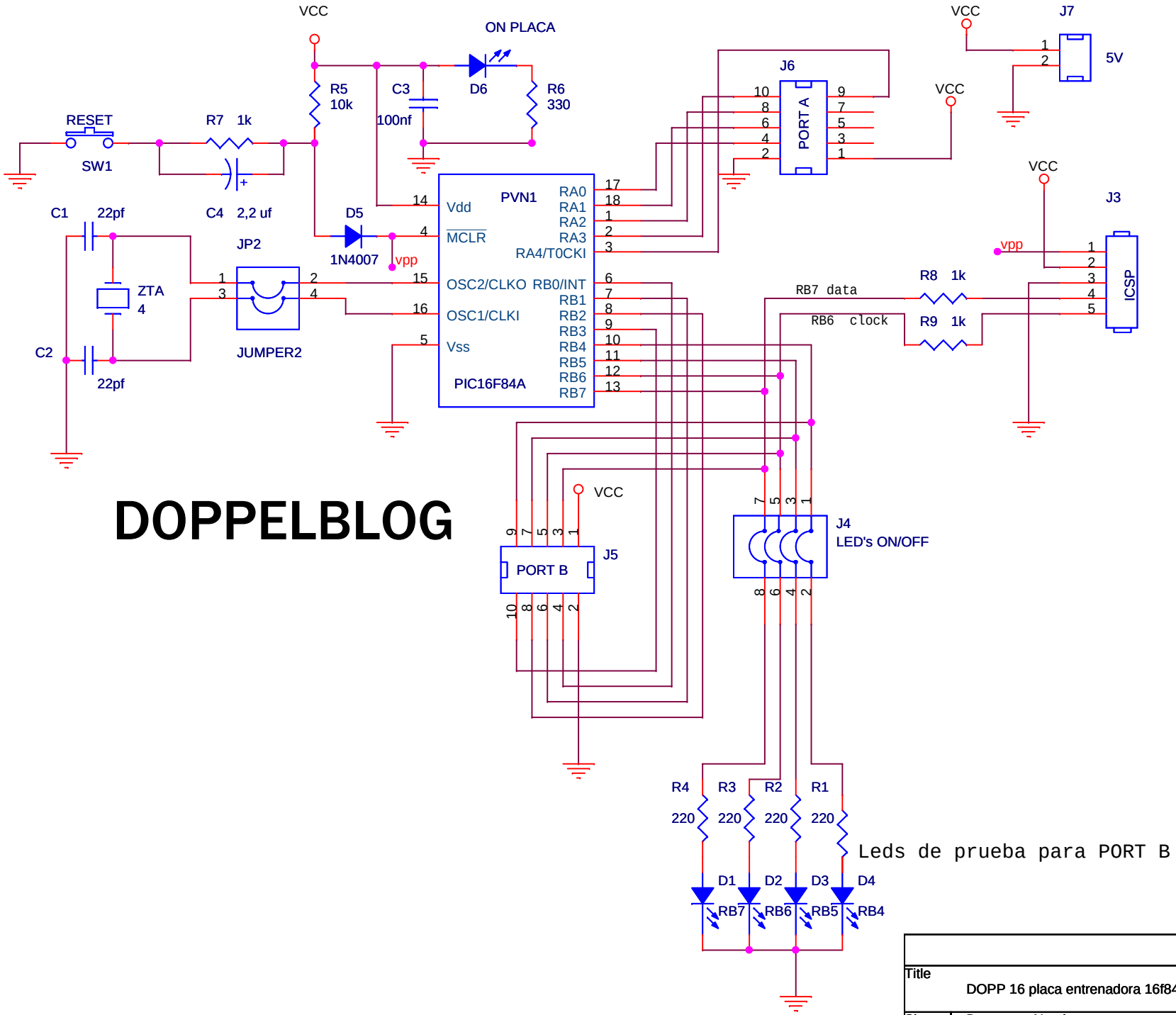

DOPPELBLOG

Title	DOPP 16 placa entrenadora 16f84/628	
Size A	Document Number DOPPELBLOG - www.cirware.com.ar/blog	Rev 1.0
Date: Thursday, February 21, 2008	Sheet 1 of 1	