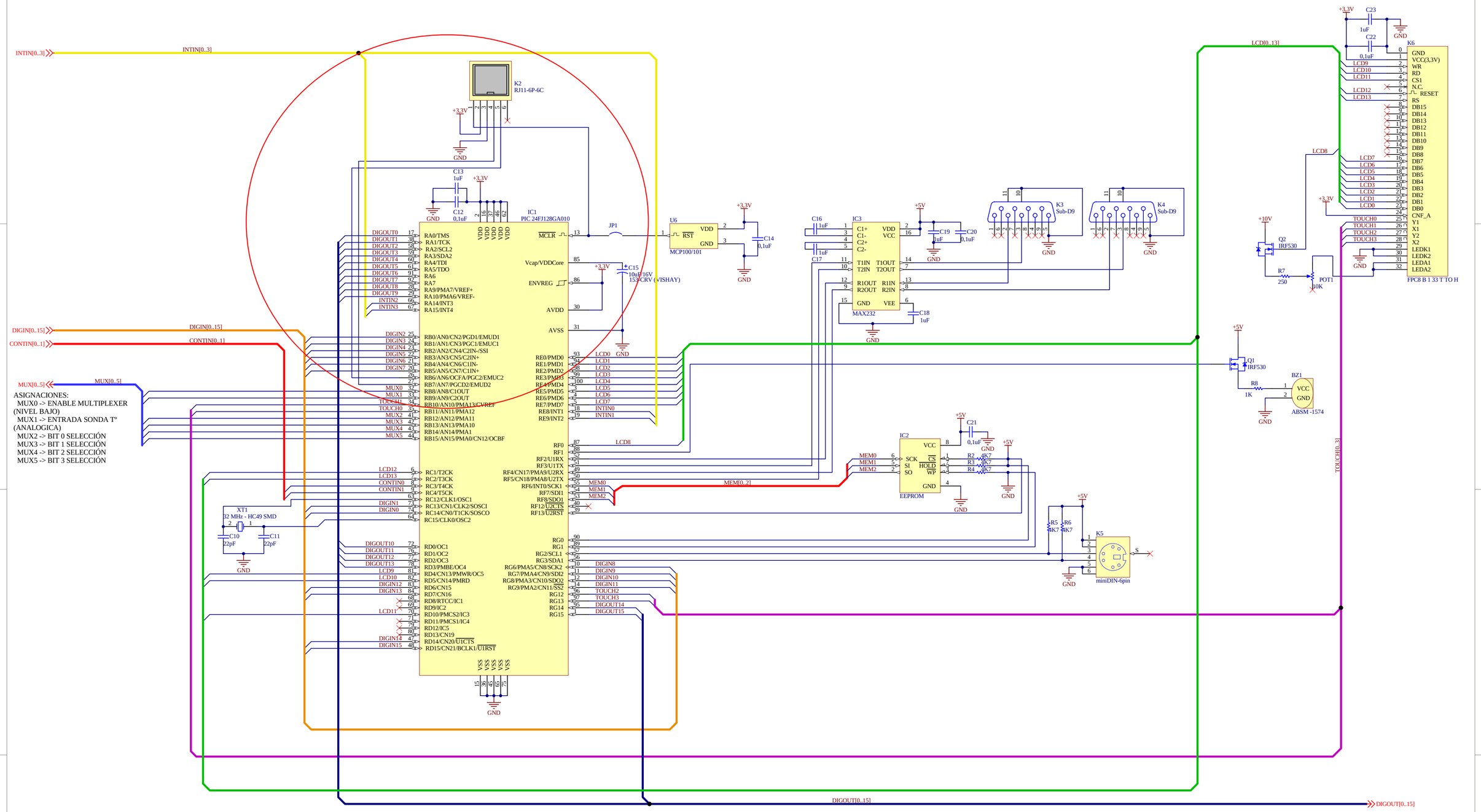


| Title | | |
|---|---|---|
| Size A2 | Number | Revision |
| Date: 23/01/2009 | Sheet of | |
| File: C:\Documents and Settings\...\C01 - CPU Y COMMS.SchDoc | Drawn By: | |