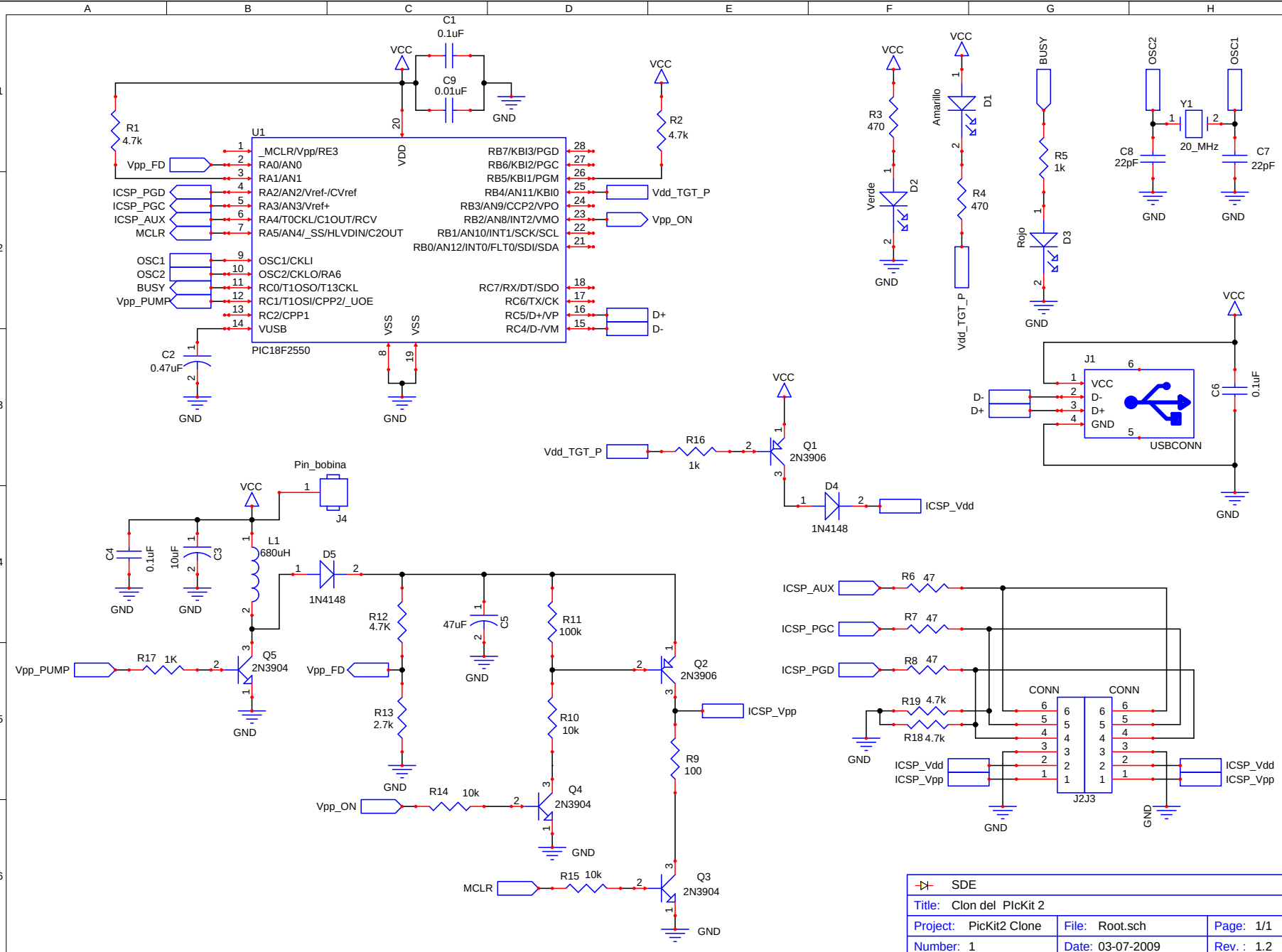
U1
PIC18F2550
_MCLR/Vpp/RE3
RA0/AN0
RA1/AN1
RA2/AN2/Vref-/CVref
RA3/AN3/Vref+
RA4/T0CKL/C1OUT/RCV
RA5/AN4/_SS/HLVDIN/C2OUT
OSC1/CKLI
OSC2/CKLO/RA6
RC0/T1OSO/T13CKL
RC1/T1OSI/CPP2/_UOE
RC2/CPP1
VUSB
RB7/KBI3/PGD
RB6/KBI2/PGC
RB5/KBI1/PGM
RB4/AN11/KBI0
RB3/AN9/CCP2/VPO
RB2/AN8/INT2/VMO
RB1/AN10/INT1/SCK/SCL
RB0/AN12/INT0/FLT0/SDI/SDA
RC7/RX/DT/SDO
RC6/TX/CK
RC5/D+/VP
RC4/D-/VM
VDD
VSS
VCC
GND
Vpp_FD
ICSP_PGD
ICSP_PGC
ICSP_AUX
MCLR
OSC1
OSC2
BUSY
Vpp_PUMP
Vdd_TGT_P
Vpp_ON
D+
D-
C1 0.1uF
C9 0.01uF
R1 4.7k
R2 4.7k
C2 0.47uF
R3 470
R4 470
R5 1k
Amarillo
Verde
Rojo
D1
D2
D3
Y1 20_MHz
C8 22pF
C7 22pF
J1
USBCONN
C6 0.1uF
R16 1k
Q1 2N3906
D4 1N4148
ICSP_Vdd
Pin_bobina
J4
C4 0.1uF
C3 10uF
L1 680uH
D5 1N4148
R17 1K
Q5 2N3904
R12 4.7K
R13 2.7k
C5 47uF
R11 100k
R10 10k
Q2 2N3906
ICSP_Vpp
R9 100
R14 10k
Q4 2N3904
R15 10k
Q3 2N3904
R6 47
R7 47
R8 47
R19 4.7k
R18 4.7k
CONN
J2J3
SDE
Title: Clon del PIcKit 2
Project: PicKit2 Clone
File: Root.sch
Page: 1/1
Number: 1
Date: 03-07-2009
Rev. : 1.2