TopPrint PicKit2_Clone

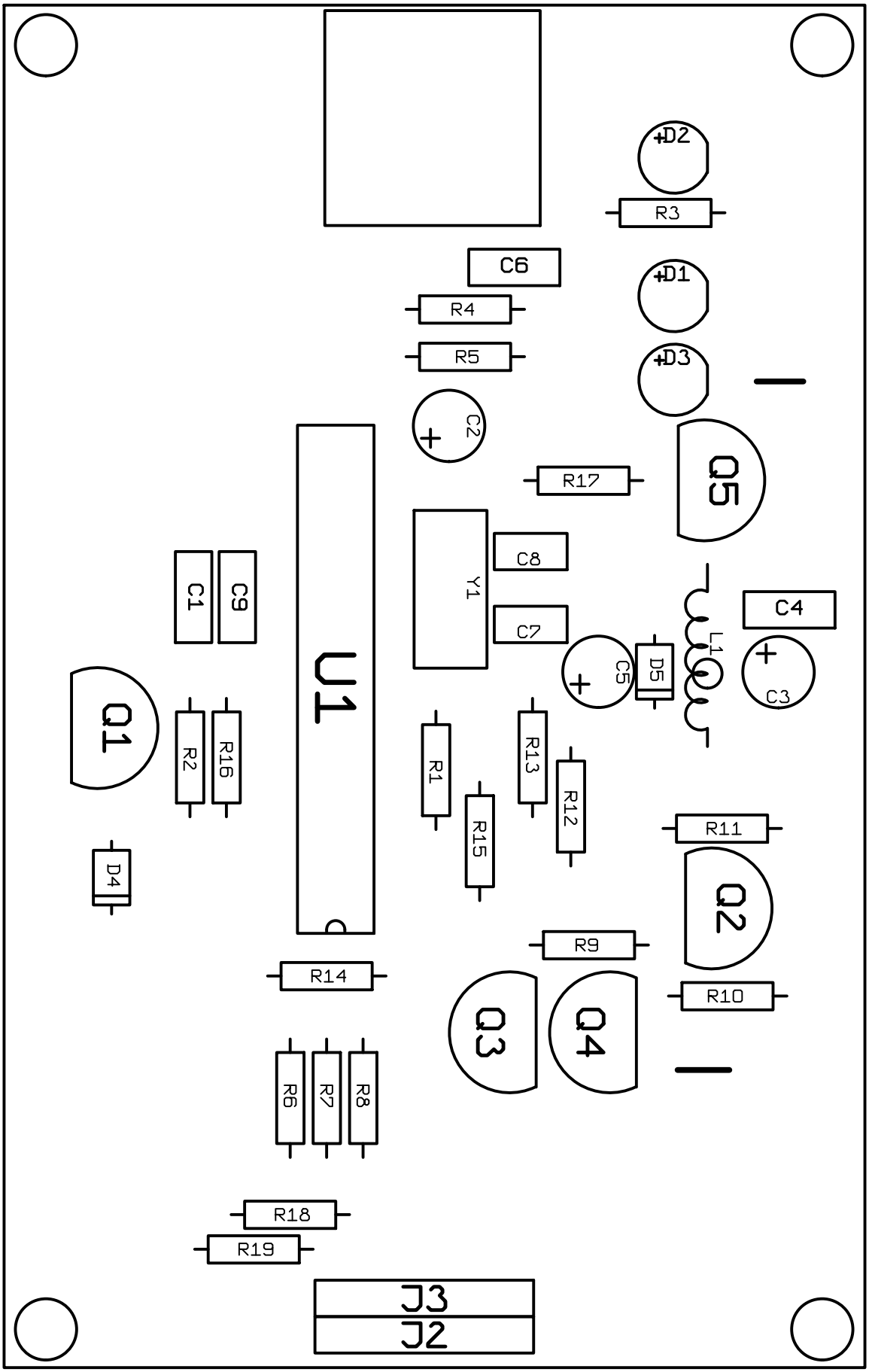

95.00mm x 60.00mm